G2731789

Technical Data
Part Description: Snap fitted rolling lobe type complete assembly
Bellow Height: 400mm
Minimum Recommended Height: 180mm
Design Height: 270mm
Maximum Recommended Height: 380mm
Working Stroke: 200mm
Loading Capacity @ 1 BAR @ 270mm (±5%): 2.4kN
Loading Capacity @ 7 BAR @ 270mm (±5%): 31.15kN
Maximum OD @ 7 BAR : Ø315mm
Required Space: 345mm
Weight (±0.2kg) : 7.7kg

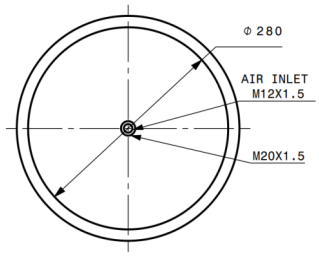

Top View

Force (kN)

Height (mm) \ Air Pressure	1 bar	2 bar	3 bar	4 bar	5 bar	6 bar	7 bar	8 bar
380	2.50	5.35	8.20	11.25	14.50	17.75	21.40	25.25
360	2.65	6.05	9.20	12.75	16.35	20.00	24.10	28.25
340	2.60	6.50	10.30	14.10	18.05	22.35	26.75	31.50
320	2.55	6.85	11.00	15.35	19.70	24.35	29.15	34.15
300	2.60	7.00	11.40	16.15	20.80	25.60	30.80	35.90
280	2.55	6.70	11.20	16.10	21.00	26.00	31.30	36.80
260	2.25	6.45	10.95	15.80	20.55	25.70	31.15	36.60
240	2.40	6.35	10.55	15.35	20.15	25.25	30.30	35.60
220	2.35	6.40	10.40	15.05	19.70	24.45	29.70	34.75
200	2.50	6.45	10.65	15.20	19.80	24.40	29.40	34.70
180	2.40	6.45	10.65	15.55	20.15	25.20	30.20	35.50

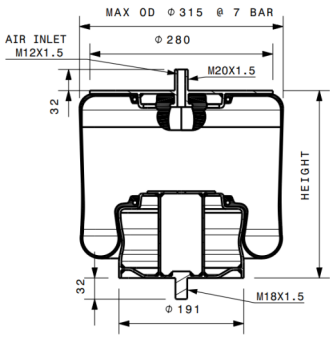

Section View

Graph

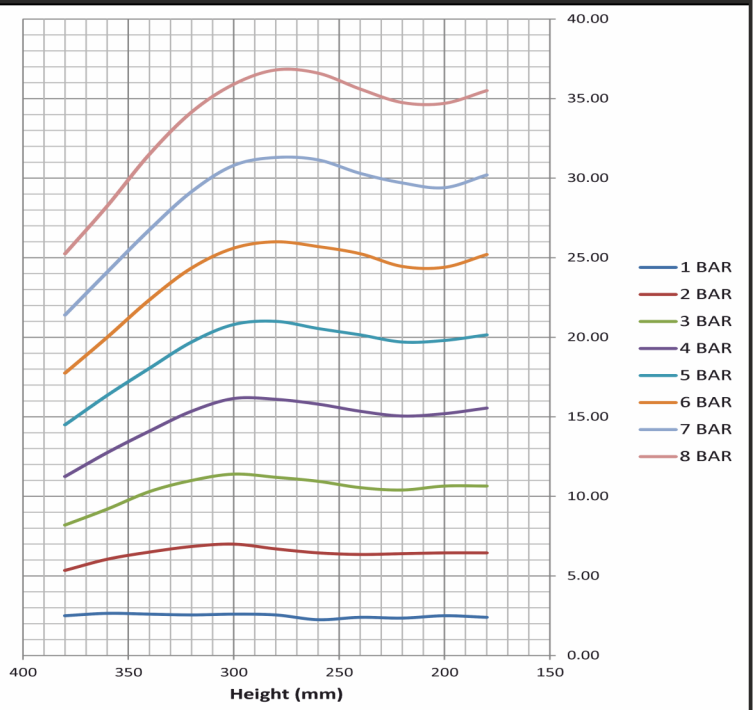

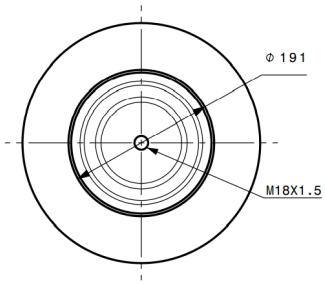

Bottom View

CROSS REFERENCE				
Gibraltar	Firestone	Contitech	Volvo	Leyland/ Wheels India
G2731789	NA	NA	20540789	NA